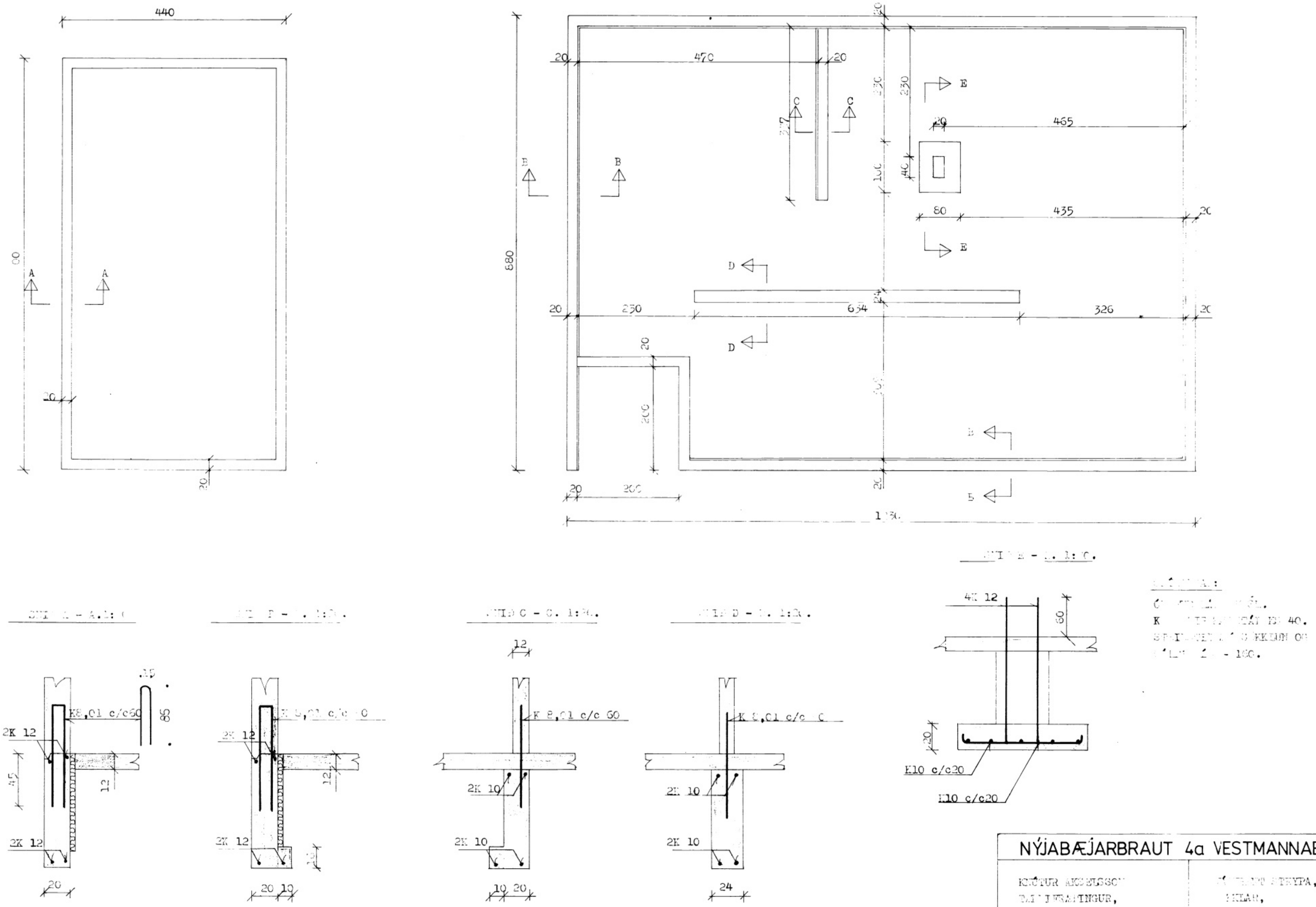

NÝJABÆJARBRAUT 4a VESTMANNAEYJUM

KNÚTUR AKSELSSON
TAPPIFRAMINGUR,
FURULUNDUR 5
GARÐABÆ, S. 40536

[illegible] STEYPA,
[illegible]KLAR,
[illegible]MYND & [illegible]